Belgravia Exposed Thermostatic
Shower Set
US-BEL_SLIDER

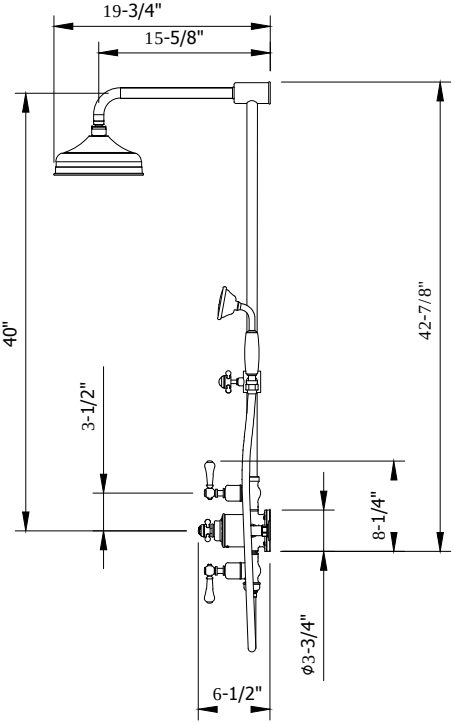

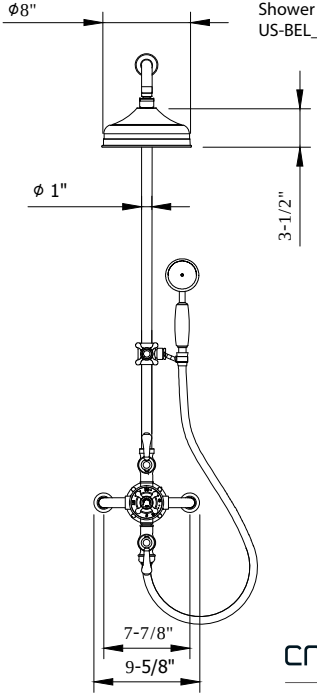

crosswater
LONDON